REV.	DESCRIPTION	ECN NO.	NAME	DATE
4	UPDATE THE PLATING	N/A	Fang	2019-06-14
5	NEW FRAME	N/A	LDH	2020-7-2

ALL PARTS MUST MEET TO RoHS REQUIREMENTS

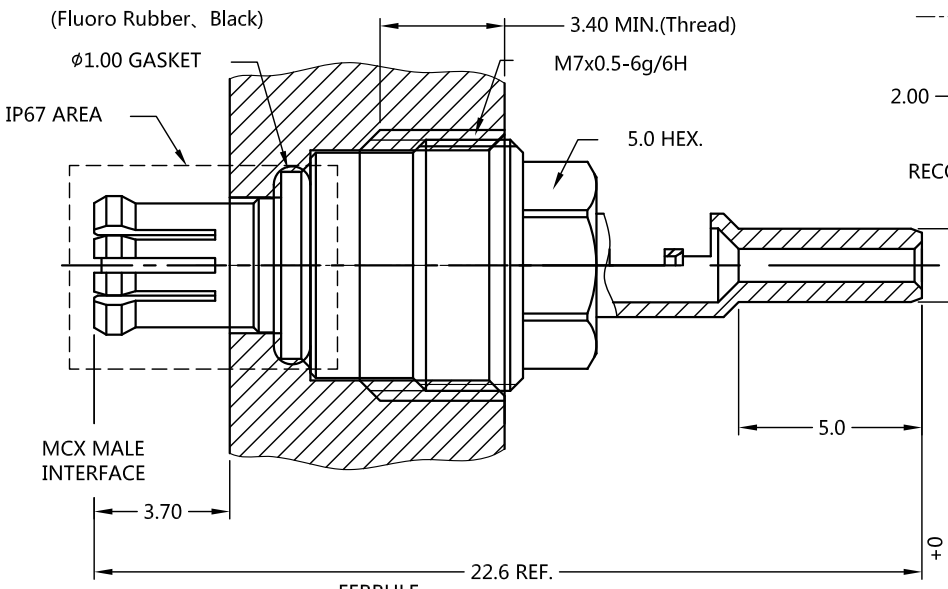

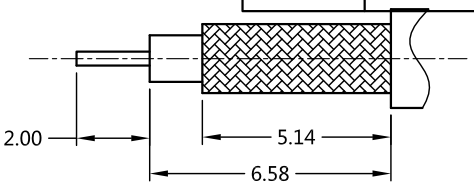

RECOMMENDED CABLE STRIPPING DIM'S

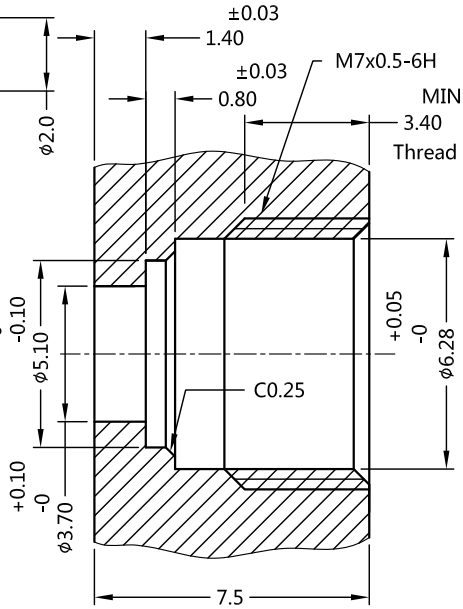

RECOMMENDED PANEL SIZE

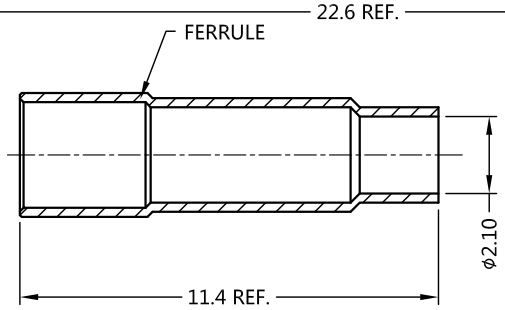

MATERIALS AND PLATING UNIT: MICRO-INCHES		
PART NAME	MATERIALS	PLATING
OUTER CONTACT	BERYLLIUM COPPER	ALBALOY /COPPER
CONTACT PIN	BRASS	GOLD PL.15U"/NICKEL/COPPER
INSULATOR	PTFE ASTM-D-1710	N/A
BODY	BRASS	ALBALOY /COPPER

ELECTRICAL CHARACTERISTICS		
IMPEDANCE		50 Ω
VOLTAGE RATING		1500 V(RMS)
FREQUENCY RANGE		0 ~ 100 MHz
DIELECTRIC WITHSTANDING VOLTAGE		>1500V
CONTACT RESISTANCE	CENTER CONTACT	<5.0 mΩ
	OUTER CONTACT	<2.5 mΩ
INSULATION RESISTANCE		>1000 MΩ
INSERTION LOSS		<0.10 x$\sqrt{F(GHz)}$ dB
VSWR		<1.3

MECHANICAL CHARACTERISTICS	
FORCE TO ENGAGE	<10 LBS
FORCE TO DISENGAGE	0.2 LBS
CENTER CONTACT RETENTION FORCE	2.25 LBS
DURABILITY	>500cycles

ENVIRONMENTAL PARAMETER	
TEMPERATURE RANGE	-40℃~+165 ℃

CUSTOMER OUTLINE DRAWING

* CUSTOMER OUTLINE DRAWING

UNLESS OTHERWISE SPECIFIED:
1) EDGES : C0.15 MAX ;
2) REMOVE ALL BURRS ;
3) SURFACE ROUGHNESS : Ra1.6 ;
4) UNITS : mm ;
5) DIMENSIONS TOLERANCES
DECIMALS : .x ±0.3 .xx ±0.2 .xxx±0.1;
ANGLES : ± 5°.

THIRD ANGLE PROJECTION

APPROVED :	CUSTOMER P/N : -
CHECKED :	SCALE : 5 : 1
DRAWING : LDH	DATE : 2020-7-2
	PAGE : 1/1

SLK SUPERLINK

TITLE : MCX MALE S/T CRIMP FOR RG178 CABLE,50Ω

DRAWING NO. : 5MXM15S-A03

COMPANY WEBSITE : www.slkcorp.com