REV.	DESCRIPTION	ECN NO.	NAME	DATE
1	UPDATE DRAWING	N/A	JASON	2020-04-23
2	UPDATE DRAWING	N/A	YWD	2022-09-14

ALL PARTS MUST MEET TO RoHS REQUIREMENTS

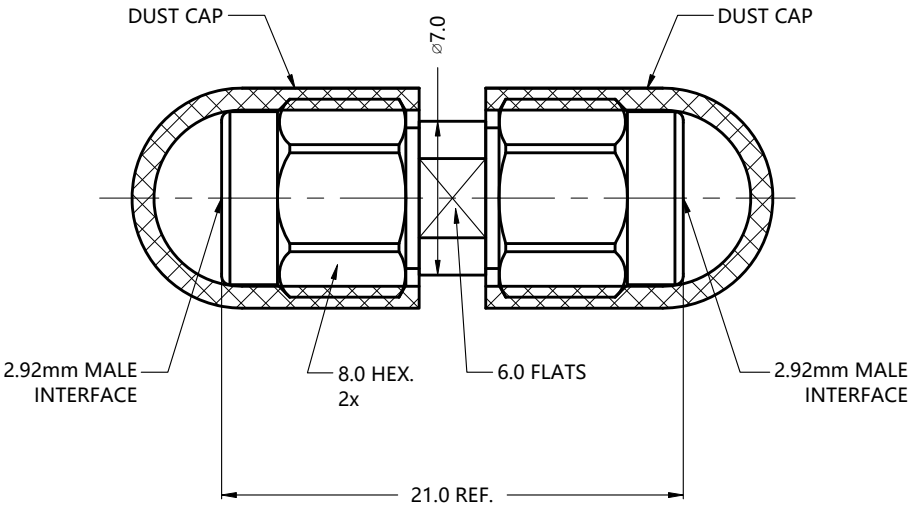

MATERIALS AND PLATING UNIT: MICRO-INCHES		
PART NAME	MATERIALS	PLATING
BODY/SHELL	STAINLESS STEEL	PASSIVATION
CONTACT PIN	Be-Cu C17300	GOLD PL./NICKEL/COPPER
INSULATOR	PEI	N/A
DUST CAP	PVC	N/A

ELECTRICAL CHARACTERISTICS		
IMPEDANCE		50 Ω
VOLTAGE RATING		175 V(rms)
FREQUENCY RANGE		DC ~ 40 GHz
DIELECTRIC WITHSTANDING VOLTAGE		>500 V
CONTACT RESISTANCE	CENTER CONTACT	<3.0 mΩ
	OUTER CONTACT	<2.0 mΩ
INSULATION RESISTANCE		>5000 MΩ
INSERTION LOSS		$< 0.05 \times \sqrt{F(GHz)}$ dB
VSWR		<1.20
3RD INTERMODULATION		N/A

MECHANICAL CHARACTERISTICS	
FORCE TO ENGAGE AND DISENGAGE	N/A
CENTER CONTACT RETENTION FORCE	> 6 lbs
RECOMMENDED COUPLING TORQUE	7-10 in.lbs
COUPLING NUT RETENTION FORCE	> 60 lbs
DURABILITY	> 500 cycles

ENVIRONMENTAL PARAMETER	
TEMPERATURE RANGE	-40 ℃ ~ +85 ℃

CUSTOMER OUTLINE DRAWING

* CUSTOMER OUTLINE DRAWING

UNLESS OTHERWISE SPECIFIED:
1) EDGES : C0.15 MAX ;
2) REMOVE ALL BURRS ;
3) SURFACE ROUGHNESS : Ra1.6 ;
4) UNITS : mm ;
5) DIMENSIONS TOLERANCES
DECIMALS : .x ±0.3 .xx ±0.2 .xxx±0.1 ;
ANGLES : ± 5°.

THIRD ANGLE PROJECTION

APPROVED :	CUSTOMER P/N : -
CHECKED :	SCALE : 1 : 1
DRAWING :	DATE : 2020-09-14
	PAGE : 1/1

SLK®

TITLE : 2.92mm MALE TO 2.92mm MALE ADAPTER

DRAWING NO. : 5P9M06S-P9M-005

COMPANY WEBSITE : www.slkcorp.com